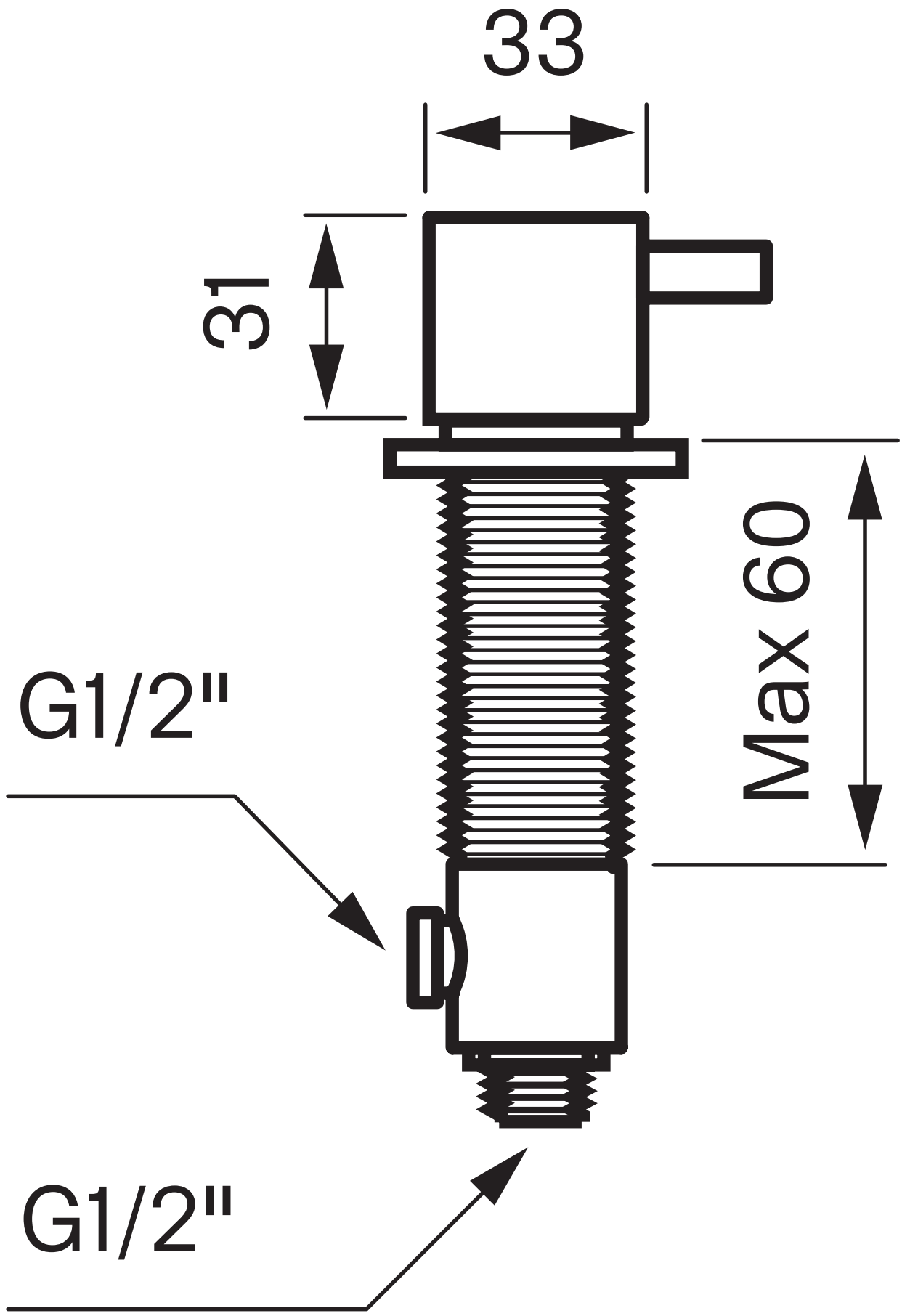
33
31
Max 60
G1/2"
G1/2"